EE-434 Power Electronics

Engr. Dr. Hadeed Ahmed Sher

Ghulam Ishaq Khan Institute of Engineering Sciences and Technology
Topi 23460, Pakistan

hadeed@giki.edu.pk

April 20, 2019

Overview

1. CUK Converter
   - Assumptions for analysis
   - Circuit diagram
   - Circuit Analysis
   - Resultant waveforms
   - Derivation of transfer function
   - Determining the component values
2. DCM operation
   - Buck converter with DCM
     - Determination of transfer function

Introduction

Similar like buck-boost converter, the output may be larger or smaller than the input with polarity reversal.
It is a combination of buck and boost converter such that input stage resembles boost converter and output stage is of buck converter.
Motivation of CUK converter is based on two aspects.
1) Synthesize a switching dc-dc converter that can increase or decrease the input dc voltage.
2) Making the input and output currents non-pulsating (continuous).
We will see that in this converter the energy storage and retrieval is performed by a series capacitor C_1.

- Steady-state conditions exist.
- Switching period is T, switch is closed for DT and open for (1-D)T
- Inductor is in CCM mode and large enough to make the current constant. Output capacitor is large enough so that the voltage (V_o) is essentially constant.
- All components are ideal.

Circuit diagram

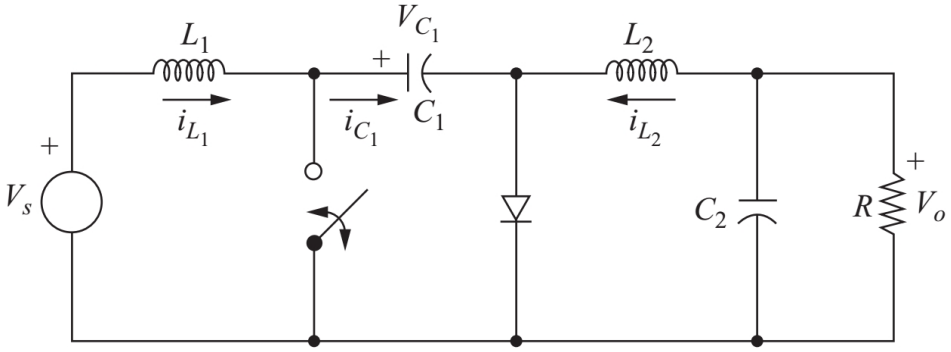

These circuits are same

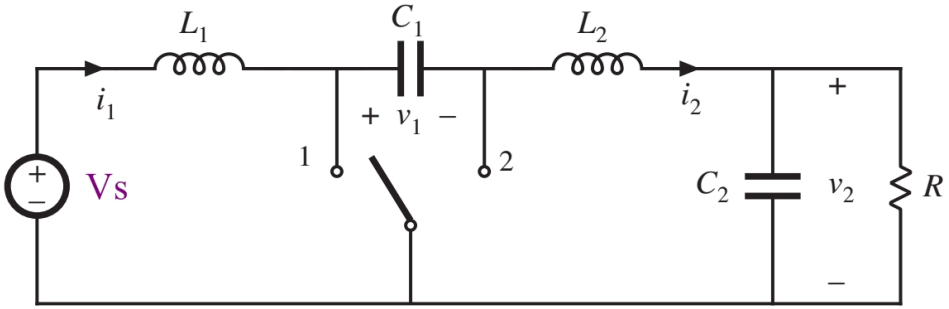

Analysis for switch closed $0 \leq T \leq DT$

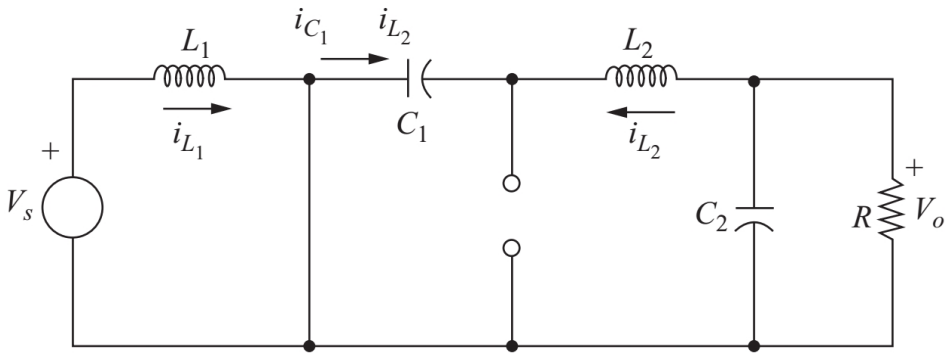

These circuits are same except that of i_{L2} direction

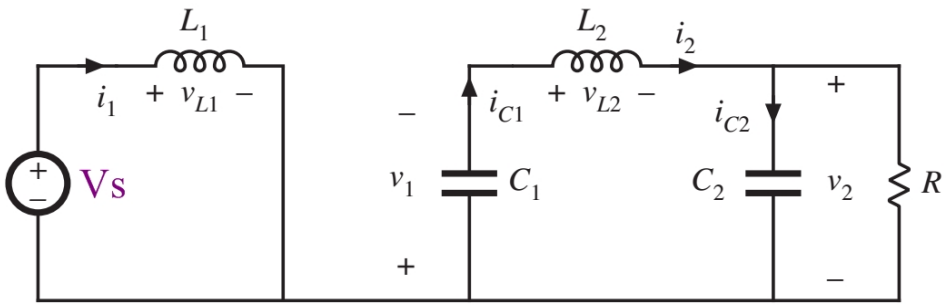

Figure: This is used for analysis

$$v_{L1} = V_s \tag{1}$$

$$v_{L2} = -V_1 - V_2 \tag{2}$$

$$i_{C1} = I_2 \tag{3}$$

$$i_{C2} = I_2 - \frac{V_2}{R} \tag{4}$$

Small ripple approximation is applied i.e., ripples are negligible as stated in the assumptions.

Analysis for switch closed $DT \leq T \leq T$

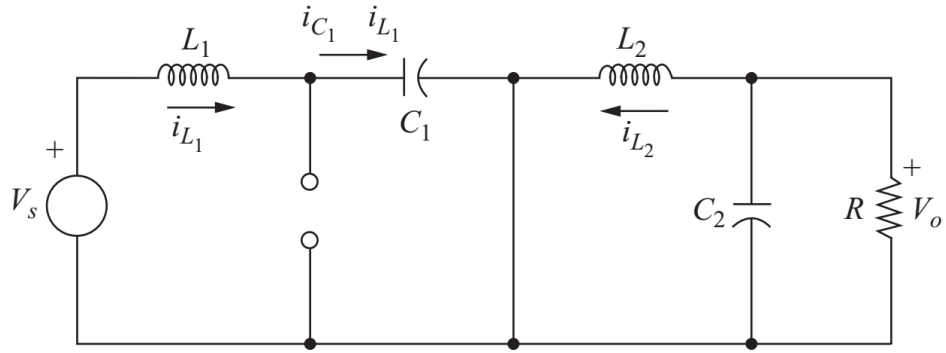

These circuits are same except that of i_{L2} direction

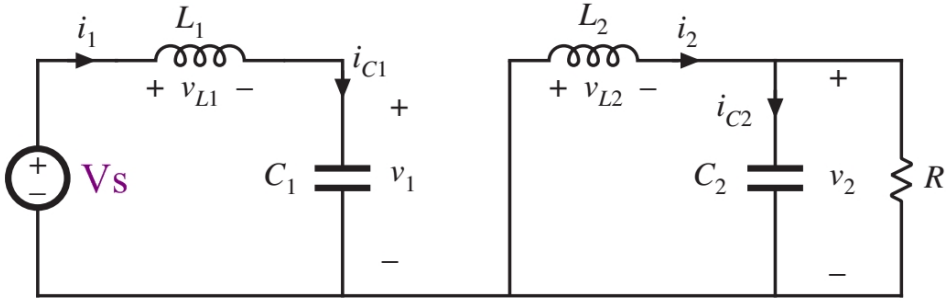

Figure: This is used for analysis

$$v_{L1} = V_s - V_1 \tag{5}$$

$$v_{L2} = -V_2 \tag{6}$$

$$i_{C1} = I_1 \tag{7}$$

$$i_{C2} = I_2 - \frac{V_2}{R} \tag{8}$$

Small ripple approximation is applied i.e., ripples are negligible as stated in the assumptions.

Resultant waveforms

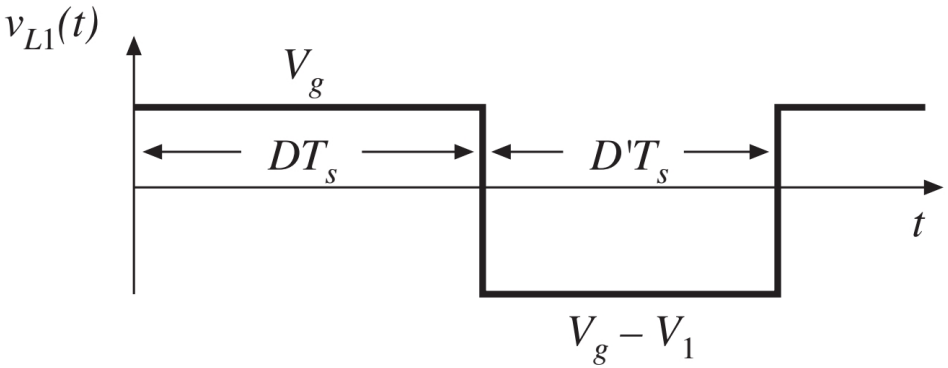

Figure: Inductor voltage of L_1

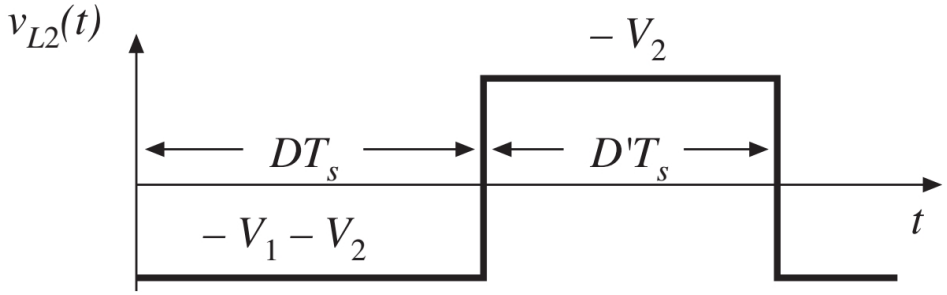

Figure: Inductor voltage of L_2

$$DV_s + D'(V_s - V_1) = 0 \qquad (9)$$

$$D(-V_1 - V_2) + D'(-V_2) = 0 \qquad (10)$$

Resultant waveforms

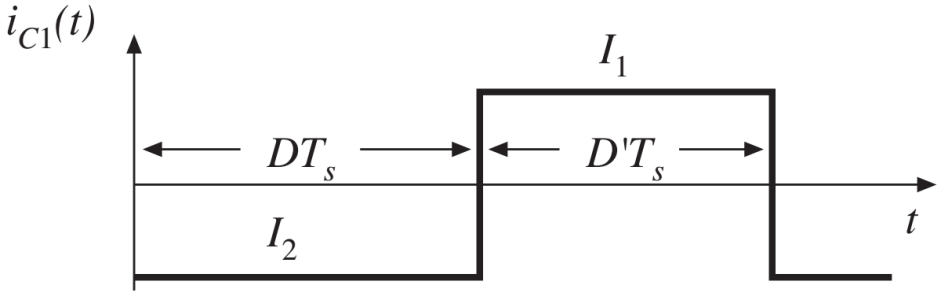

Figure: Capacitor current of C_1

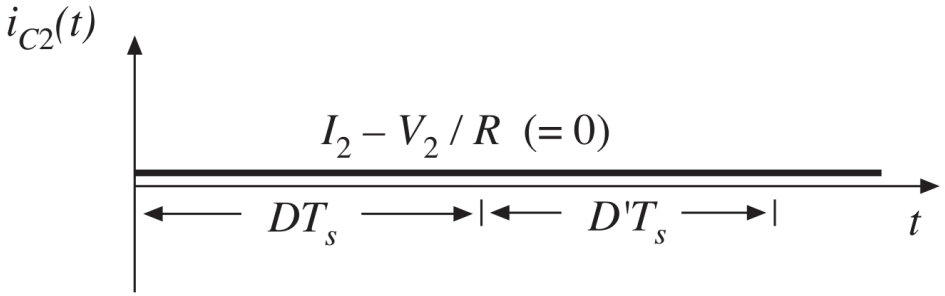

Figure: Capacitor current of C_2

$$DI_2 + D'I_1 = 0 \qquad (11)$$

$$I_2 - \frac{V_2}{R} = 0 \qquad (12)$$

Derivation of transfer function

Using (9)(10) (11) and (12) we get the following equations

$$V_1 = \frac{V_s}{D'} \tag{13}$$

Using the above equation and by expanding (10)

$$V_2 = \frac{-D}{D'} V_s \tag{14}$$

Because I_2 is V_2/R and V_2 is already calculated we can express I_1 as follows

$$I_1 = \frac{-D}{D'} I_2 = (\frac{D}{D'})^2 \frac{V_s}{R} \tag{15}$$

$$I_2 = \frac{V_2}{R} = \frac{-D}{D'} \frac{V_s}{R} \tag{16}$$

(14) is the transfer function of CUK converter. Notice that it is same as buck-boost converter with a polarity reversal.

Resultant waveforms

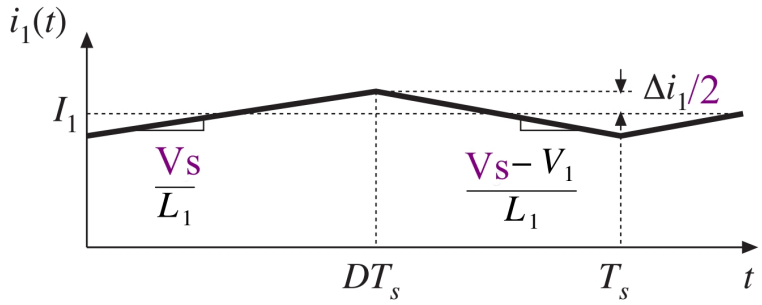

Figure: Inductor current of L_1

$$\frac{di_1(t)}{dt} = \frac{V_s}{L_1} \tag{17}$$

The net change in inductor current is initial value multiplied by the slope

$$\Delta i_1 = \frac{V_s D T_s}{L_1} \implies L_1 = \frac{V_s D}{f \Delta i_1} \tag{18}$$

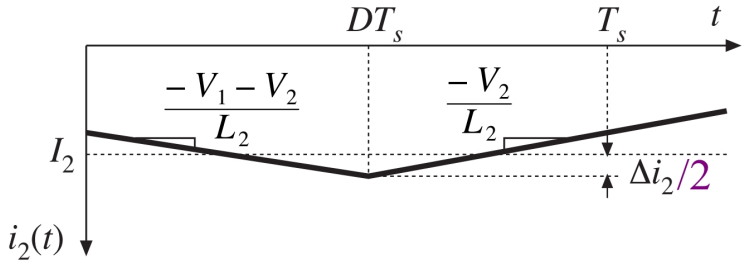

Figure: Inductor current of L_2

$$\frac{di_2(t)}{dt} = \frac{-V_1 - V_2}{L_2} \tag{19}$$

The net change in inductor current is initial value multiplied by the slope

$$-\Delta i_2 = \frac{-V_1 - V_2}{L_2} D T_s \tag{20}$$

$$L_2 = D \frac{V_1 + V_2}{f \Delta i_2} \tag{21}$$

Determining the component values

Students are advised to derive the values of Capacitors as an assignment.

DCM operation

Continuous current is not a mandatory condition, in fact in renewable enrgy applications, the designs are mostly on the DCM.
In this mode the inductor current become zero before the switching cycle ends.

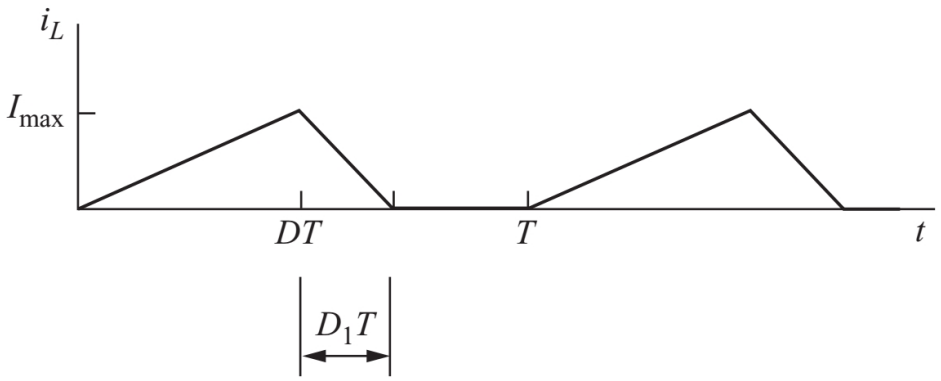

Figure: Inductor current in DCM mode

Properties of converters change when DCM happens. The duty cycle becomes load dependent, output impedance increases and control of output voltage may lost in absence of load.

Buck converter with DCM

Consider the buck converter with a variable load.

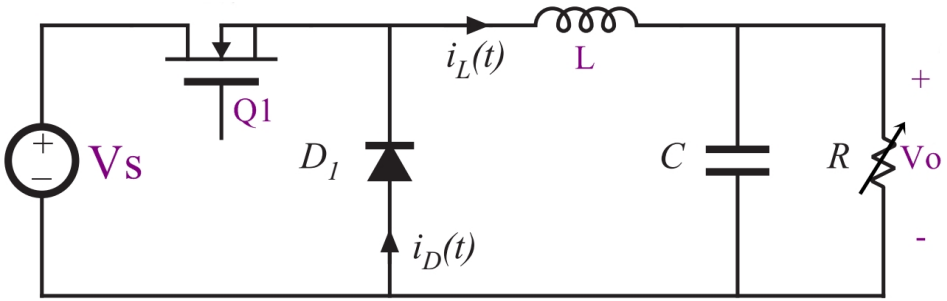

Figure: Inductor current in DCM mode

Reducing the load by increasing the resistance leads to reduced inductor current. If the load is reduced to the extent that $I < \Delta i_L$ then DCM happens.

Buck converter with DCM

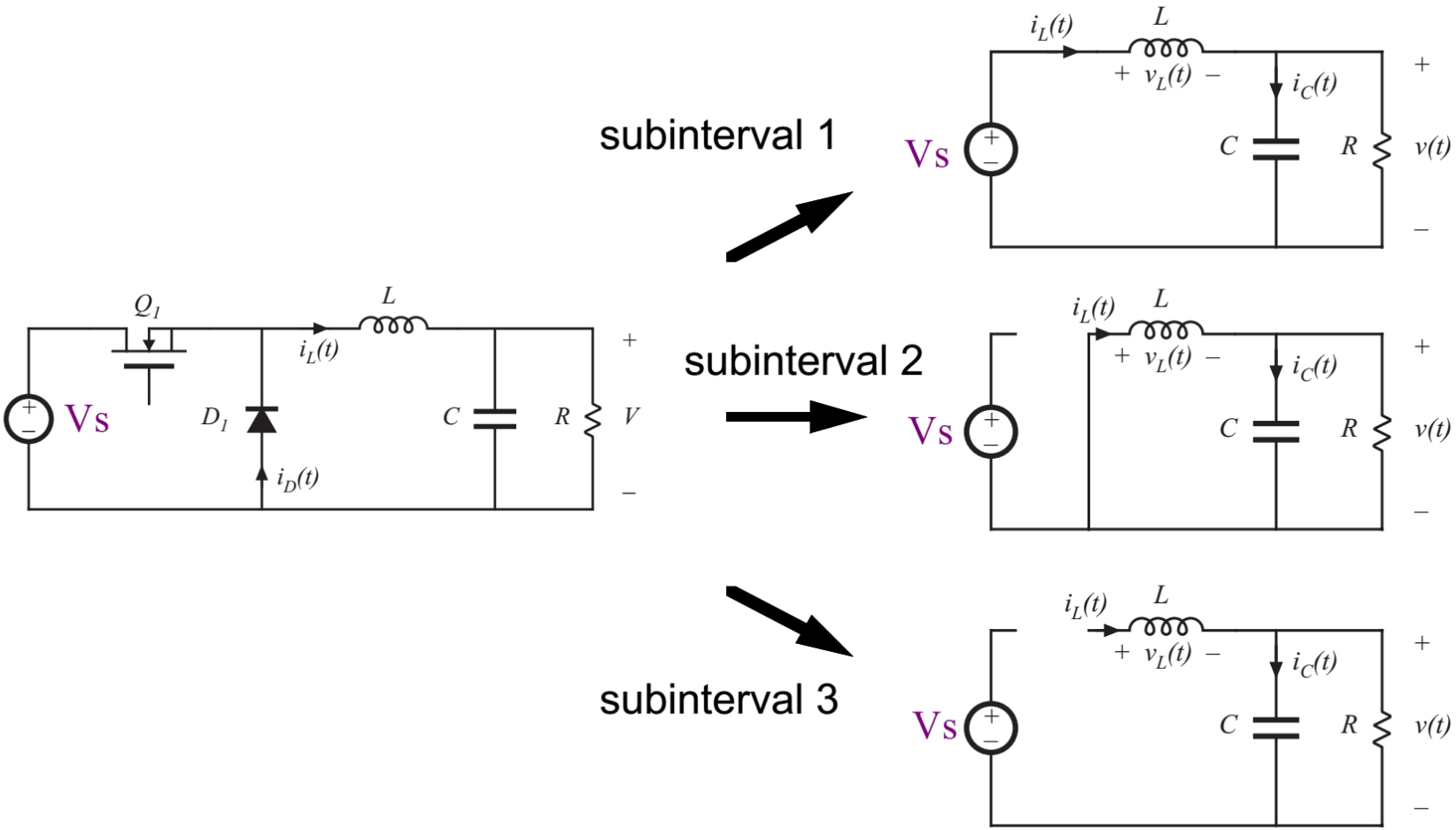

Figure: Sub-circuits during DCM mode

Determination of transfer function

The inductor voltage equations for each sub-circuit/interval are as follows.

During sub-interval 1

$$V_L \approx V_s - V \tag{22}$$

During sub-interval 2

$$V_L \approx -V \tag{23}$$

During sub-interval 3

$$V_L = 0 \tag{24}$$

The inductor voltage equations can be drawn as

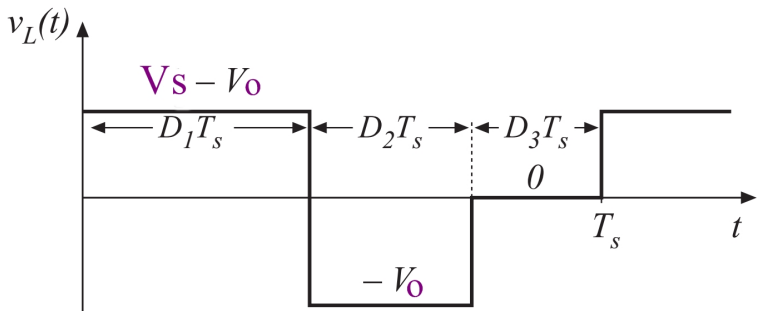

Using Volt-sec product

$$D_1(V_s - V_o) + D_2(-V_o) + D_3(0) = 0 \tag{25}$$

Solving this

$$V_o = V_s\left(\frac{D_1}{D_1 + D_2}\right) \tag{26}$$

⚠ D_2 is undetermined.

Determination of transfer function

The capacitor current equations for each sub-circuit/interval are as follows.

During sub-interval 1

$$i_C \approx i_L(t) - \frac{V_o}{R} \qquad (27)$$

During sub-interval 2

$$i_C(t) \approx i_L(t) - \frac{V_o}{R} \qquad (28)$$

During sub-interval 3

$$i_C(t) \approx \frac{-V_o}{R} \qquad (29)$$

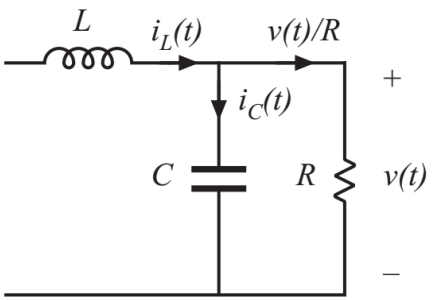

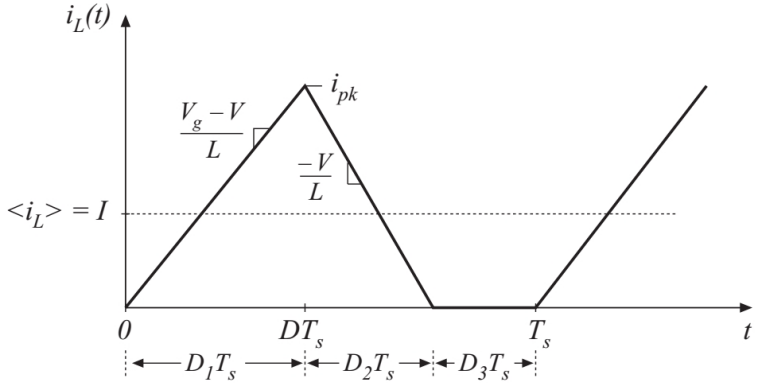

Using KCL

$$i_L(t) = \underbrace{i_c(t)}_{0 \text{ in SS}} + \frac{V}{R} \implies = \frac{V}{R} \qquad (30)$$

Determination of transfer function

Using (22)(23) and (24) the slope of the current is obtained and plotted as shown below

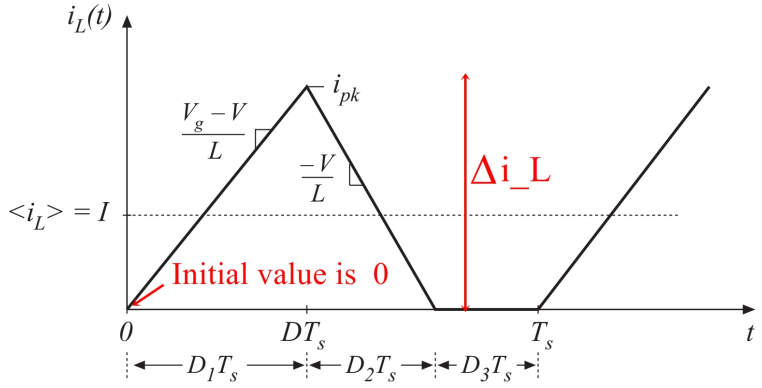

Peak current is given as

$$i_L(D_1 T_s) = i_{pk} = (\frac{V_s - V_o}{L})(D_1 T_s) \quad (32)$$

The average inductor current can be calculated as

$$i_L(avg) = \frac{1}{T_s} \underbrace{\int_0^{T_s} i_L(t)dt}_{\text{Area of triangle=0.5BXH}} \quad (33)$$

$$i_L(avg) = \frac{1}{2} i_{pk}(D_1 + D_2) T_s \quad (34)$$

Substituting the value of i_{pk}

$$i_L(avg) = (V_g - V)\frac{D_1 T_s}{2L}(D_1 + D_2) \quad (35)$$

$$\frac{V}{R} = \frac{D_1 T_s}{2L}(D_1 + D_2)(V_s - V_o) \quad (36)$$

Determination of transfer function

Two equations and two unknowns are obtained from (31) and (36). The solution is obtained by eliminating D_2.

$$\frac{V_o}{V_s} = \frac{2}{1 + \sqrt{1 + 4K/D_1^2}} \tag{37}$$

where, $K = 2L/RT_s$.
The boundary between CCM and DCM occurs when $D_1 = 1 - D$

Home work

Students are advised to derived the DCM expression for boost and buck-boost converter.